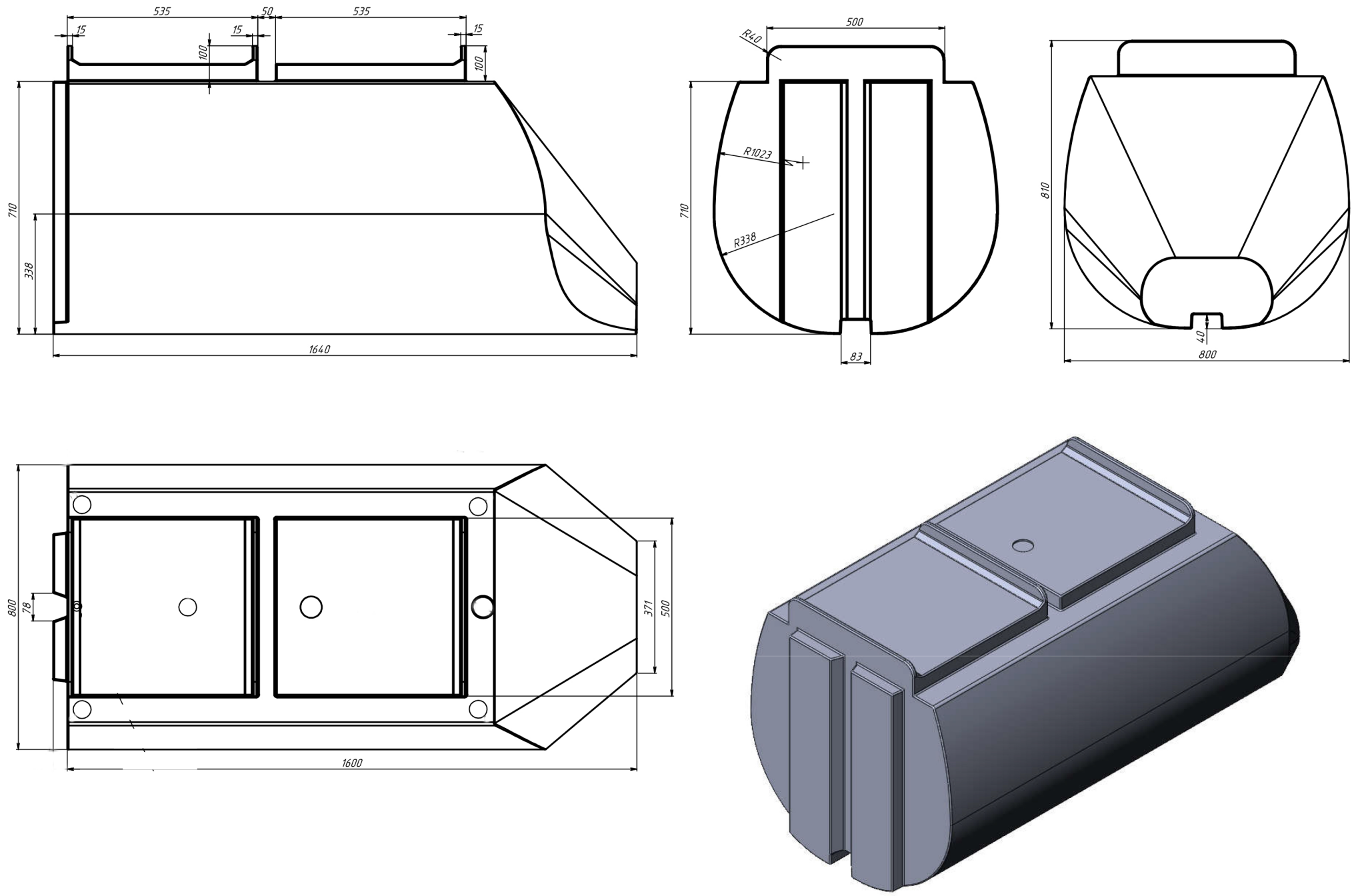

EPlast System