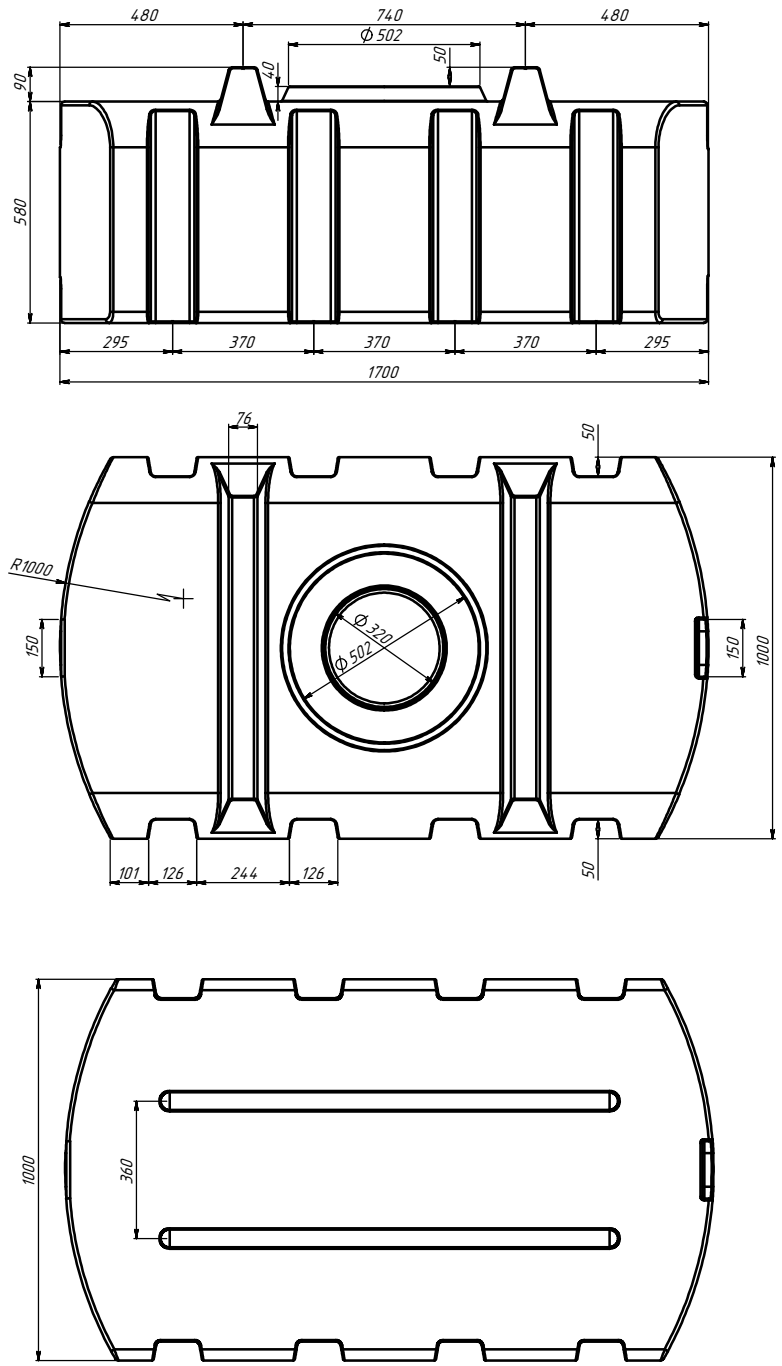

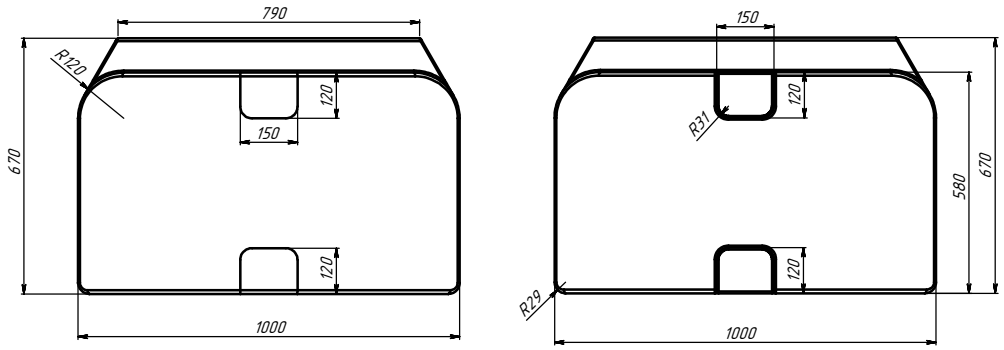

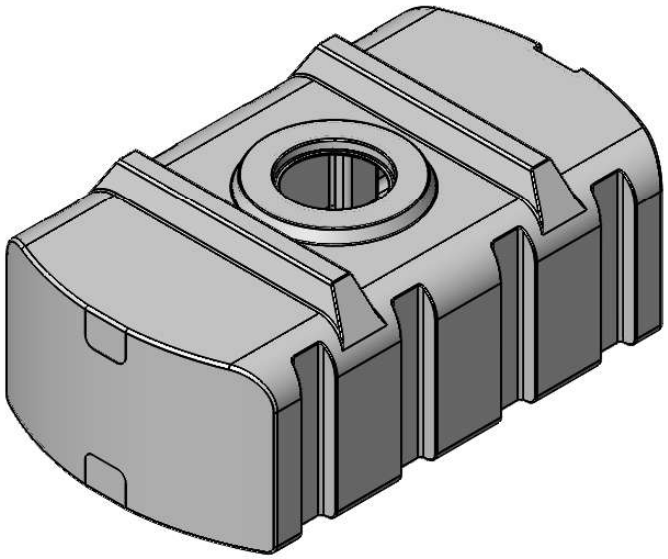

EPlast System